MIRO 2-2I385CW

(2 Layer)

Compact Fanless Embedded Computer
with Intel® Bay Trail Processor

Features:

- Intel® Bay Trail CPU: Atom™ E3845 / E3825, Celeron® J1900
- 2 / 4GB DDR3L memory on board
- 2 x GbE, 4 x COM, VGA, 2 x USB
- Wide Range 9~36V DC input
- DIN Rail mountable (with optional Kit)

Specifications :

Motherboard	2I385CW	
CPU	Intel® Bay Trail J1900 / E3825 / E3845 CPU	
Chipset	Intel Bay Trail SoC	
Memory	On board DDR3L 2 / 4GB	
Storage	mSATA, HDD / SSD*	
Expansion slots	1 x Full-size Mini PCIe (PCIe / USB / mSATA)	
	1 x Half-size Mini PCIe (USB / mSATA)	
I/O ports	Network	2 x Intel GbE
	USB	2 x USB 2.0
	Serial ports	4 x COM
	Display	1 x VGA
	GPIO	DI / DO (optional)
Optional Modules & Accessory	GPS, Bluetooth, WiFi, 4G LTE, DI/O, Isolated COM	
	*VESA Mount Kit, *DIN Rail Mounting Kit	
	*Wall Mount Kit,	
	*SATA Kit	
	*External Power Adapter	
OS Support	Windows 10, Linux	

Mechanical	
Dimensions	140W x 92D x 64H mm
Weight	0.75 kg
Mounting	Wall Mount*, DIN Rail Mount*, VESA Mount*
Power	
DC input	+9~36V (2I385CW) ; +12V (2I385A)
AC input	External adapter 100 / 240V
Environment	
Operating Temp. (100 % CPU usage)	-20°C to +60°C with mSATA / SSD 0°C to +50°C with HDD
Storage Temp.	-20°C to +70°C
Relative Humidity	95% @ 40°C, non-condensing
Certification	CE / FCC, UL, IEC / IECEE

Dimension

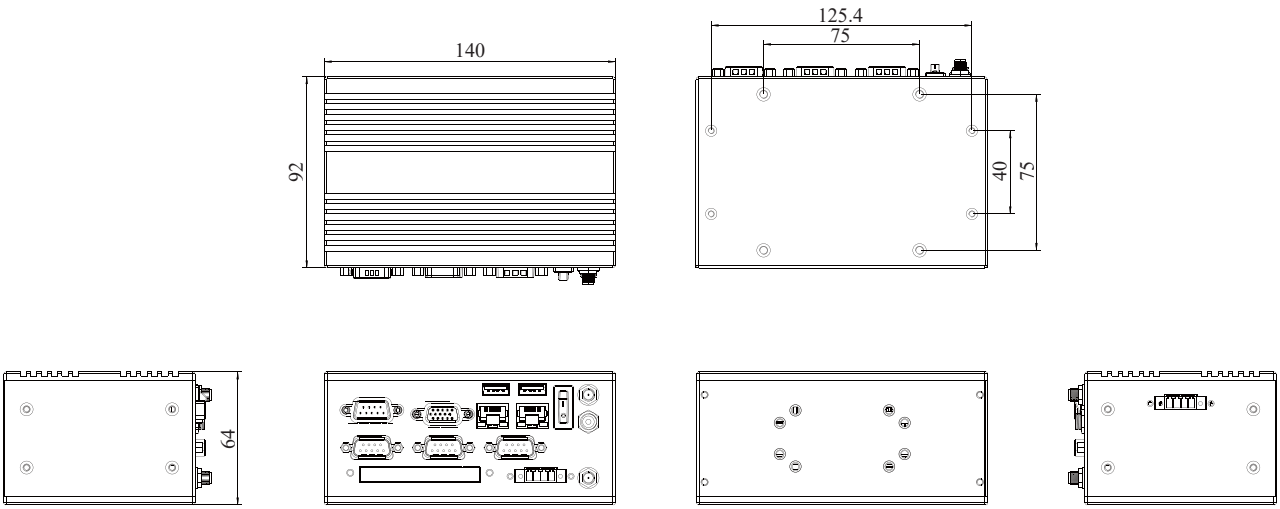

2I385CW

Specification are subject to change without prior notice. ODM / OEM is available.